Tag	Direction	Angle	Inner Radius
A	DOWN	90°	0.5
B	UP	90°	0.5

NOMINAL K FACTOR: 0.44

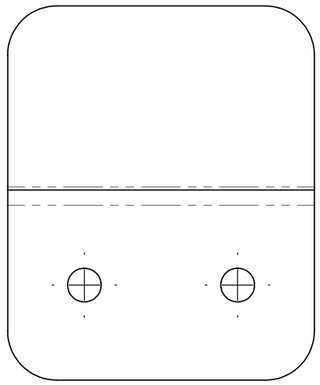

FRONT VIEW

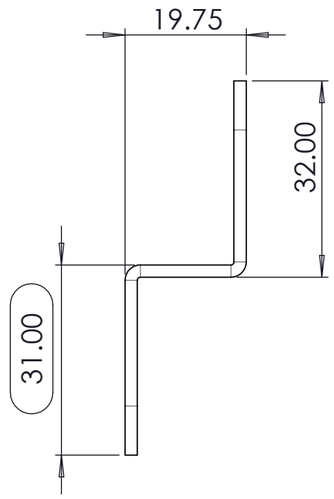

RIGHT VIEW

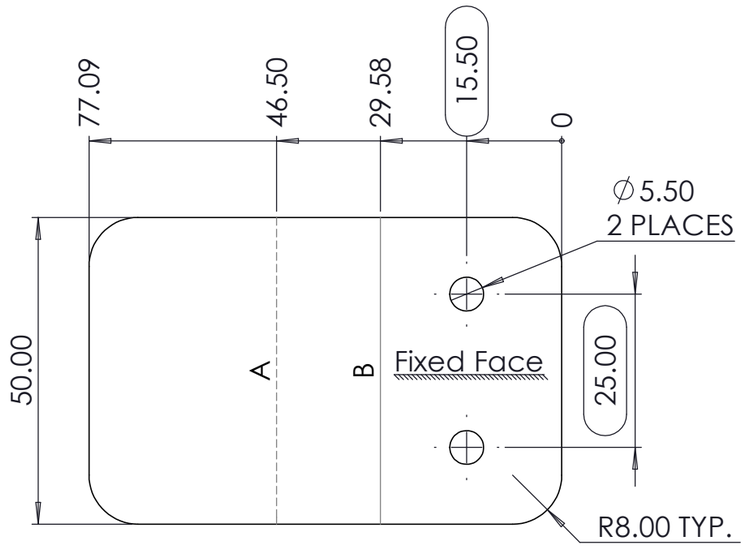

FLAT PATTERN

TOLERANCES

- Tolerances to ISO 2768-mK unless otherwise stated.
- For dimensions under 0.5mm tolerance is ±0.05.
- ISO 2768-1: Per below table (class indicated by check mark).
- ISO 2768-2: K (medium)

LINEAR - PERMISSIBLE DEV. IN MM FOR RANGES IN NOMINAL LENGTHS

	CLASS	0.5 - 6mm	6 - 30mm	30 - 120mm	120 - 400mm	Over 400mm
	FINE	±0.05mm	±0.1mm	±0.15mm	±0.2mm	±0.3mm
☑	MEDIUM	±0.1mm	±0.1mm	±0.3mm	±0.5mm	±0.8mm
	COARSE	±0.3mm	±0.5mm	±0.8mm	±1.2mm	±2.0mm

ANGULAR - PERMISSIBLE DEV. IN DEGREES & MINUTES FOR RANGES IN NOMINAL LENGTHS

	CLASS	0 - 10mm	10 - 50mm	50 - 120mm	120 - 400mm	Over 400mm
	FINE	±1°	±0°30'	±0°20'	±0°10'	±0°5'
☑	MEDIUM	±1°	±0°30'	±0°20'	±0°10'	±0°5'
	COARSE	±1° 30'	±1°	±0°30'	±0°15'	±0°10'

DIMENSIONS

- All dimensions are in millimetres unless otherwise indicated.
- Critical inspection dimension: ⬭
- Dimensions with ** may require adjustment during tool trials.
- First article inspection number: ◯ (supplier to provide a report detailing accuracy to each of these dimensions).
- Other dimensions for reference.

SURFACE TEXTURE KEY (RA STANDARD)

Refer to 3D part and surface finish sheet for application

Orange	Deburr	RA 3.2
Green	Smooth	RA 1.6
Blue	Polish	RA 0.9

PART SUPPLY

- Break all sharp edges R0.2 max.
- Cosmetic surfaces to be free of scratches, tool marks, and gouges.
- Part to be clean and free of oil, grease, and other foreign contaminants.
- Remove dross and tabs from cut edges
- Minimise handling marks on all external surfaces.
- Minimise tooling/die marks on external bends.
- No visible cracking/crazing permitted on bends.

PAINTING:

- Mask all areas indicated. No paint permitted on masked surfaces.
- Finish to be uniform in color, gloss, and texture across all visible surfaces. Painted surfaces shall be free of runs, sags, orange peel, fisheyes, cratering, blisters, and embedded foreign particles (dust, fibres).

INSTALLED HARDWARE (PEMs, standoffs, studs):

- Inserted hardware to be seated flush to 0.2mm proud.
- Installed hardware must be perpendicular to the surface within 1°.

#	DESCRIPTION	DATE
--	--	--
--	--	--
--	--	--
--	--	--
--	--	--
--	--	--
--	--	--
--	--	--
--	--	--
--	--	--
--	--	--
--	--	--
01	Initial Release	19/09/2025

DESIGN INTENT

Unless otherwise specified, fabricate per this drawing. The 3D model represents the final formed condition for reference.

© COPYRIGHT

This drawing is supplied in confidence. Do not disclose to any third party without prior written consent from Manufacturing Skills Queensland

MANUFACTURING SKILLS QUEENSLAND

monochrome
www.monochrome-design.com

PROJECT NAME	Headphone Stand	COLOUR: White	PART NAME: MONO_038-p303
DRAWING TYPE	Part Drawing	FINISH: Matte	
DATE CREATED	Friday, 19 September 2025	MATERIAL: 2mm Zincanneal Sheet	DESCRIPTION: Headphone Rest Back

A3

SHEET 1 OF 1

NOTES:

- FINAL FORMED DIMENSIONS GOVERN. MANUFACTURER TO DEVELOP FLAT PATTERN TO COMPENSATE FOR THEIR SPECIFIC TOOLING AND PROCESS.

DO NOT SCALE DRAWING

SCALE:1:1